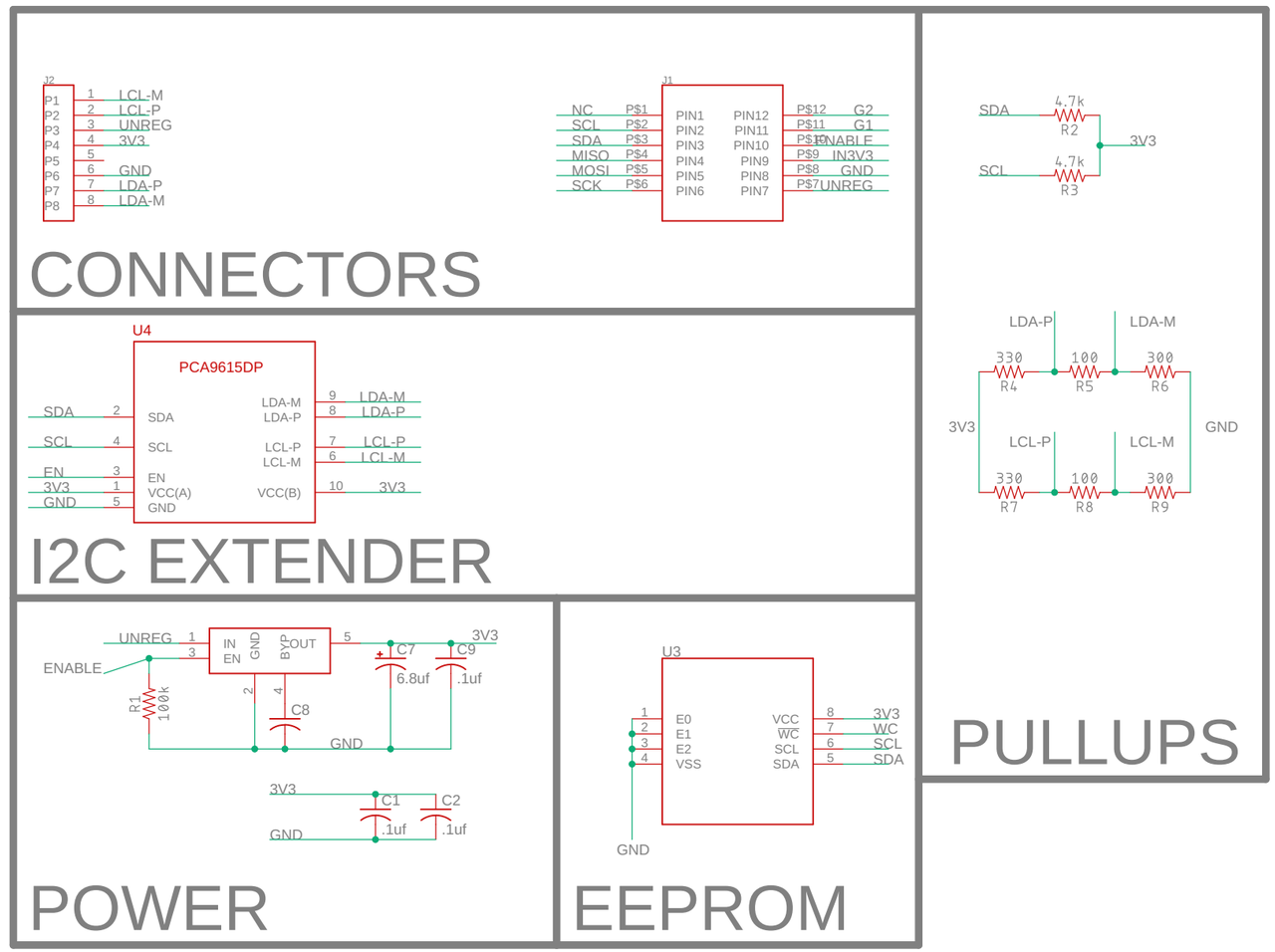
J2
P1
P2
P3
P4
P5
P6
P7
P8
1 LCL-M
2 LCL-P
3 UNREG
4 3V3
5
6 GND
7 LDA-P
8 LDA-M
CONNECTORS
J1
NC P$1
SCL P$2
SDA P$3
MISO P$4
MOSI P$5
SCK P$6
PIN1
PIN2
PIN3
PIN4
PIN5
PIN6
PIN12
PIN11
PIN10
PIN9
PIN8
PIN7
P$12 G2
P$11 G1
P$10 ENABLE
P$9 IN3V3
P$8 GND
P$7 UNREG
U4
PCA9615DP
SDA 2
SCL 4
EN 3
3V3 1
GND 5
SDA
SCL
EN
VCC(A)
GND
LDA-M
LDA-P
LCL-P
LCL-M
VCC(B)
9 LDA-M
8 LDA-P
7 LCL-P
6 LCL-M
10 3V3
I2C EXTENDER
SDA
SCL
4.7k
R2
R3
3V3
LDA-P
LDA-M
330
100
300
R4
R5
R6
3V3
GND
LCL-P
LCL-M
R7
R8
R9
PULLUPS
UNREG 1
ENABLE 3
R1 100k
IN
EN
GND
BYP
OUT
5
2
4
C8
C7 6.8uf
C9 .1uf
3V3
GND
3V3
GND
C1 .1uf
C2 .1uf
POWER
U3
1 E0
2 E1
3 E2
4 VSS
VCC
WC
SCL
SDA
8 3V3
7 WC
6 SCL
5 SDA
GND
EEPROM